NX Advanced Flow: Extend flow analysis solutions

NX CAE

Benefits

- Extend flow solution capabilities in NX Flow and NX Electronic Systems Cooling
- Speed solution time through parallel flow calculations
- Reduce costly physical prototypes by using flow simulation to understand product performance
- Gain further insight through coupled thermo-fluid multi-physics analysis using NX Advanced Flow with NX Thermal or NX Advanced Thermal
- Achieve faster CFD results through a consistent environment that allows you to quickly move from design to advanced CFD results
- Track the interface between two fluids in a sloshing problem
- Couple 1D to 3D flow submodels to simulate complex systems

Summary

NX™ Advanced Flow software is a powerful and comprehensive solution for computational fluid dynamics (CFD) problems. NX Advanced Flow is an add-on module to both NX Flow and NX Electronic Systems Cooling that extends the flow simulation capabilities of these products to include internal or external fluid flow including compressible and high-speed flows, non-Newtonian fluids, tracking of heavy particles, and multiple rotating frames of reference. Combined with NX Thermal and NX Advanced Thermal, NX Advanced Flow solves a wide range of multiphysics scenarios involving strong coupling of fluid flow and heat transfer.

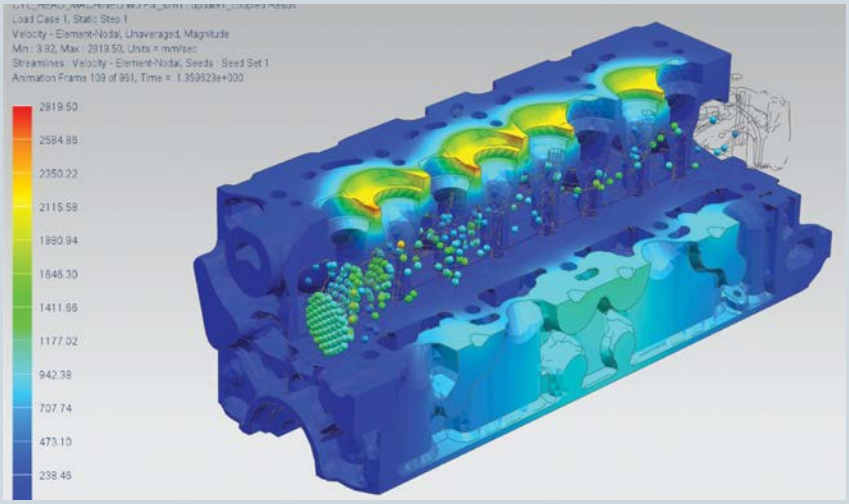

NX Advanced Flow enables you to model and simulate complex fluid flow problems through an element-based, finite volume CFD scheme used to compute 3D fluid velocity, temperature and pressure by solving the Navier-Stokes equations. Applications of NX Advanced Flow include:

- Simulate fluid movement in a moving container (liquid sloshing)
- Simulation of automotive underhood cooling
- Flow and thermal comfort analysis for HVAC systems
- Modeling high speed compressible flows
- Simulation of rotating equipment
- Simulation of non-Newtonian fluid flow

NX Advanced Flow

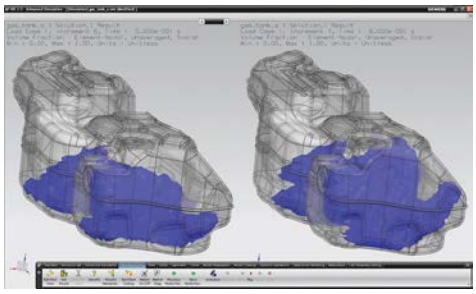

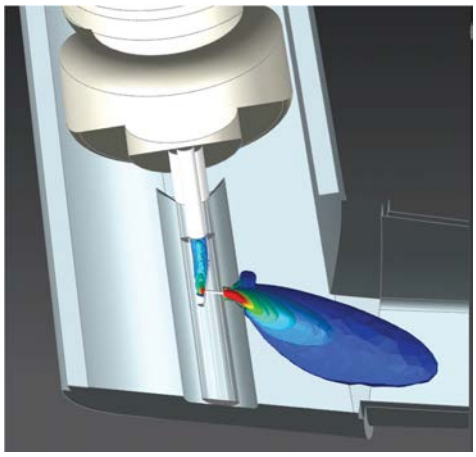

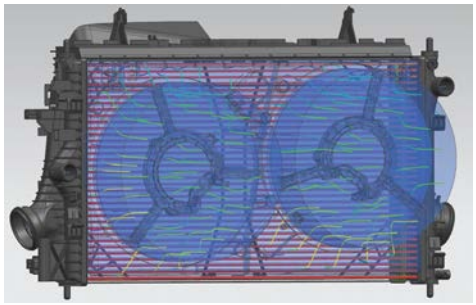

NX Advanced Flow features

Solver capabilities NX Advanced Flow adds the following capabilities to NX Flow:

- Single and multiple rotating frames-of-reference
- Additional turbulence models such as SST and k-Omega
- High speed flows with supersonic inlet
- General scalars diffusion and heavy particle tracking
- Humidity and condensation algorithm
- Non-Newtonian fluid models
- Translational and rotational periodicity
- 1D duct flow coupled with 3D flow
- Implicit convection correlations to ambient conditions
- Mixing plane boundary condition
- Two-phase, immiscible fluid flow for sloshing applications
- Multi-species mixing within the fluid domain

Add-on results post-processing options

- Mach number
- Humidity and condensation data
- Scalars distribution data
- Additional turbulence data
- Tracking of heavy particles
- PPD-percentage people dissatisfied (HVAC applications)
- PMV-predicted mean vote (HVAC applications)
- Track and plot flow data on specific regions at run time
- Acoustic power density result option

Fluid-thermal multiphysics NX Advanced Flow seamlessly couples with NX Thermal and NX Advanced Thermal for simulation of complex thermo-fluid interactions and conjugate heat transfer. The thermo-fluid solver handles disjoint meshes at fluid/solid boundaries allowing great flexibility in assembly context thermo-fluid interactions. The fluid domain and thermal domain do not need to share nodes at the interface; the coupled solver will create the appropriate heat transfer coupling at all the solid/fluid interfaces.

Fluid-structural coupling Pressure and shear force results from the NX Flow solution can be used as a pre-stress condition for a structural analysis. The NX Nastran® license is sold separately.

Supported hardware/OS

NX Advanced Flow is an add-on module to either NX Advanced FEM or NX Advanced Simulation. It requires either a license of NX Flow or NX Electronic Systems Cooling as a prerequisite. All standard NX hardware/OS platforms are supported (including Windows, Linux and selected 64-bit platforms). Contact Siemens PLM Software for for any other specific hardware/OS support requests.

Contact
Siemens Industry Software
Americas +1 800 498 5351
Europe +44 (0) 1276 702000
Asia-Pacific +852 2230 3333

www.siemens.com/nx

© 2012 Siemens Product Lifecycle Management Software Inc. All rights reserved. Siemens and the Siemens logo are registered trademarks of Siemens AG. D-Cubed, Femap, Geolus, GO PLM, I-deas, Insight, JT, NX, Parasolid, Solid Edge, Teamcenter, Tecnomatix and Velocity Series are trademarks or registered trademarks of Siemens Product Lifecycle Management Software Inc. or its subsidiaries in the United States and in other countries. Nastran is a registered trademark of the National Aeronautics and Space Administration. All other logos, trademarks, registered trademarks or service marks used herein are the property of their respective holders. X20 10633 1/12 B